KISTLER
measure. analyze. innovate.

Uniaxial accelerometer

Type 8207A

IECEx
CE
RoHS

High temperature accelerometer 480°C

Accelerometer Type 8207A… is designed for permanent vibration monitoring in harsh and high temperature environments and is available with different footprints.

- Temperature range -55 … 480 °C
- Internally case isolated; differential charge output
- Frequency response up to 5 kHz (± 10%)
- Highest reliability
- Not pyroelectric
- ARINC triangular fixation or 25x25 hole pattern
- ATEX / IECEX certified

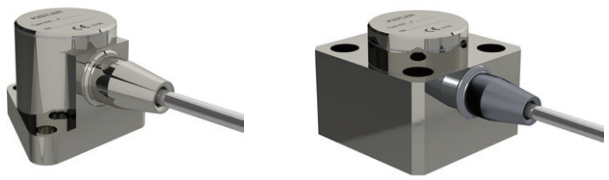

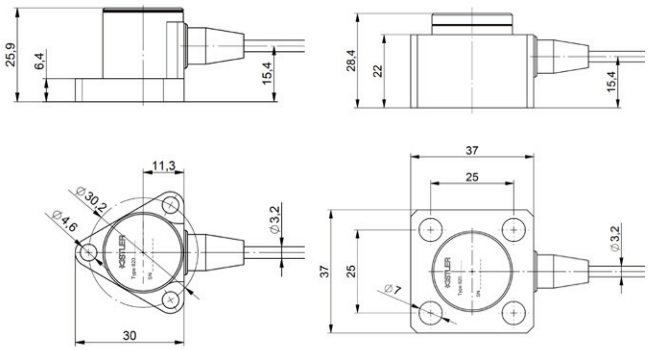

Fig. 1: Accelerometer dimensions

Description

Core of the sensor is the single crystal PiezoStar measuring element, which has a temperature capability of over 480 °C and is not pyroelectric. The sensor features a shear design, which significantly reduces the influence of temperature and base strain. Other features are high frequency response and a hermetic construction of the housing and a compact design.

The sensor 8207A… is available with two different footprints. A compact and rugged standard ARINC triangular footprint and a square footprint with 25x25 hole pattern. The sensitive axis of the sensor lies in the Z - direction.

To reach highest resolution in harsh environment, the sensor provides a differential signal output and features an internally case isolated design. The integrated hardline cable is robust, low noise and has a temperature rating of over 480°C. The cable is available in a standard length of 3 m as well as in customer specific lengths.

The accelerometer is ATEX / IECEx certified for applications in hazardous areas.

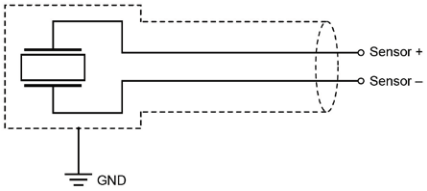

Fig. 2: Electrical schematic, 2-wire, internally case isolated

Application

Main applications are condition monitoring of gas turbines, structural analysis of turbomachinery and general purpose high temperature applications, which require:

- Temperature capability up to 480 °C
- Ex-certification for use in potentially explosive environment
- Integrated hardline cable
- EMI immune measuring chain

8207A_003-333e-06.24

KISTLER
measure. analyze. innovate.

Technical data[1)]

Dynamic characteristics

Sensitivity @ 159.15 Hz	pC/g	9.4 ±10%
	pC/ms^{-2}	0.96 ±10%
Measuring Range	g_{pk}	±500
	ms^{-2}	±4905
Frequency response		
upper freq. (+5 %)	Hz	1 … 4000
upper freq. (+10 %)	Hz	1 … 5000
lower freq. (-3 dB) [2)]	Hz	0,5
Resonance frequency, typical		
@ 25 °C	kHz	>12
@ 480 °C	kHz	>10
Thermal sensitivity shift, typical	% / 100 °C	2
Transverse sensitivity	%	<3
Amplitude Linearity	%	<1

[1)] Reference temperature for performance specifications is 25°C unless otherwise noted.

[2)] In combination with differential charge amplifier 5181, 5183, 5185.

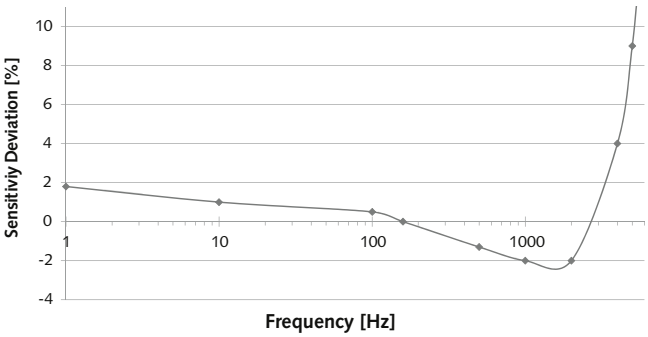

Fig. 3: Typical frequency response; relative to reference value at 159 Hz

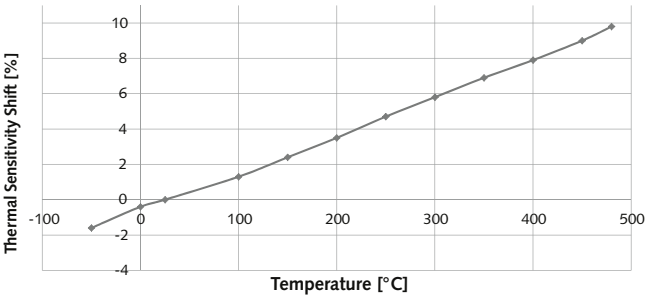

Fig. 4: Typical thermal sensitivity shift

Electrical characteristics

Insulation resistance		
Pin – Pin @ 25 °C	Ω	$\geq 1 \cdot 10^{10}$
Pin – Pin @ 480 °C	Ω	$\geq 1 \cdot 10^{6}$
Pin – Case @ 25 °C	Ω	$\geq 1 \cdot 10^{10}$
Pin – Case @ 480 °C	Ω	$\geq 1 \cdot 10^{6}$
Capacitance		
Pin – Pin @ 25 °C	pF	<15 + 60 pF/m
Pin – Case @ 25 °C	pF	<8 + 60 pF/m
Polarity		
acceleration in plus Z- direction	charge	negative

Environmental characteristics

Operating temperature range sensor and hardline cable		
Continuous	°C	-55 … 480
Extreme (t < 100 h)	°C	-55 … 520
Operating temperature range termination		
LEMO PCA.0S.302	°C	-55 … 180
7/16“ -27 UNS-2A	°C	-55 … 200
Open leads	°C	-55 … 180
Humidity (ingress protection)		Hermetically sealed (IP68)
Max. ambient pressure @T_{max}		
Triangular footprint	bar	25
Square footprint	bar	500
Sinusoidal vibration limit	ms^{-2}_{pk}	±15000
Shock limit (1ms half sine)	ms^{-2}_{pk}	±25000
Base strain sensitivity	gpk/με	$<5*10^{-5}$

8207A_003-333e-06.24

KISTLER
measure. analyze. innovate.

Technical data (continuation)

Hazardous area

Type of protection		
Ex-nA	ATEX	II 3G Ex nA IIC T6 …T490 °C Gc SEV 17 ATEX0140x
	IECEx	Ex nA IIC T6 …T490 °C Gc IECEx SEV 17.0021X
Ex-ia	ATEX	II 1G Ex ia IIC T6 …T490 °C Ga SEV 17 ATEX0140X
	IECEx	Ex ia IIC T6 …T490 °C Ga IECEx SEV 17.0012X

Entity parameter (intrinsic safe) [3]		
Ui	V	≤30
Ii	mA	≤130
Ci	pF	≤15 + 170 pF/m
Li	µH	0
Pi	W	≤0,8

[3] Special conditions for safe use in potentially explosive areas are described in the instruction manual

INCONEL alloy 600 are registered trademarks of INCO family of companies.

Physical characteristicss

Weight sensor and cable		
Triangular footprint	gram	75 + 47 g/m
Square footprint	gram	110 + 47 g/m
Sensing mode		shear
Material		
Case		INCONEL alloy 600
Cable jacket		INCONEL alloy 600
Wire		Nickel
Mounting		
Triangular footprint		3xM4x12 (2,9 N·m)
Square footprint		4xM6x30 (4 N·m)

Sensor configuration and hardline cable termination options

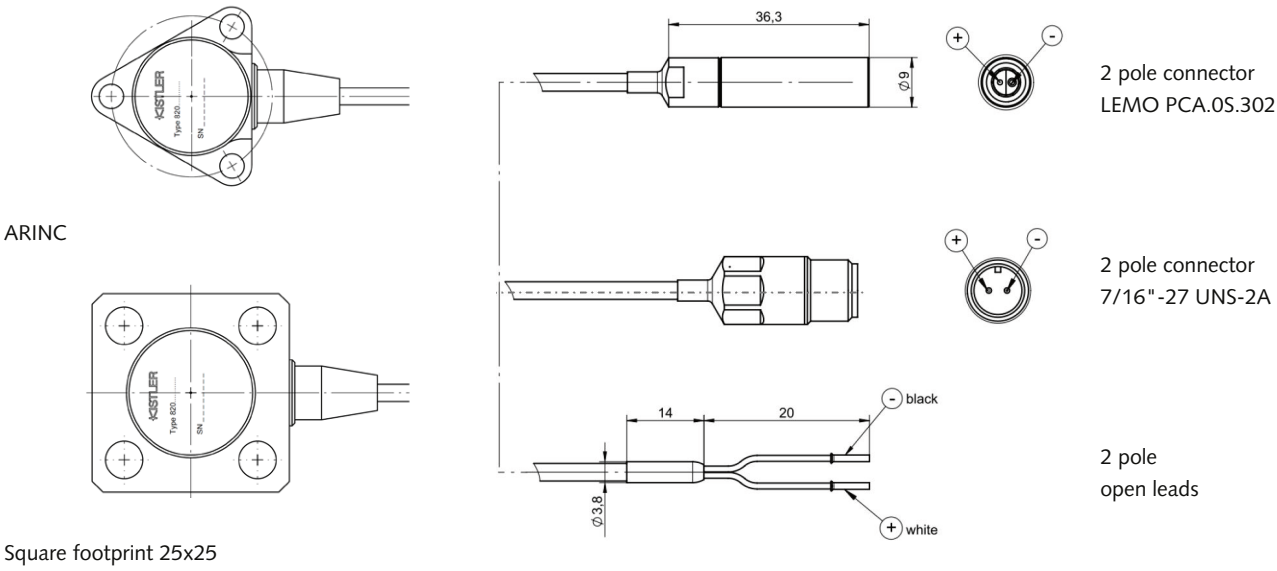

Fig. 5: Configuration options

8207A_003-333e-06.24

KISTLER
measure. analyze. innovate.

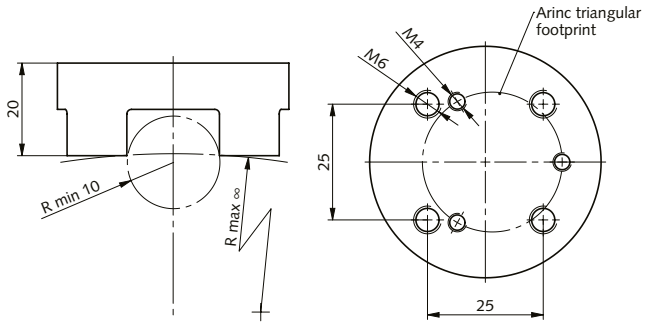

Fig. 6: Mounting adapter for tubes, Ø25… ∞
Type 8433AP20
(high temp. cement or spot welding attachement)

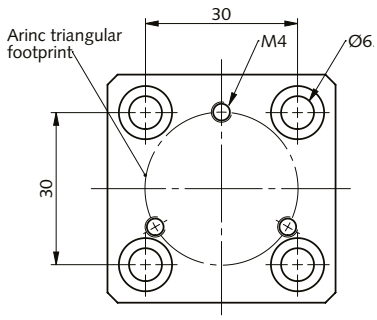

Fig. 7: Mounting adapter to 30x30 mm hole pattern with adaption to ARINC triangular footprint
Type 8433AS30

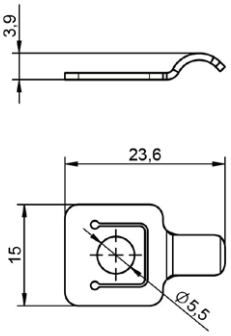

Fig. 8: Mounting bracket for hardline cable
Type 1423A1

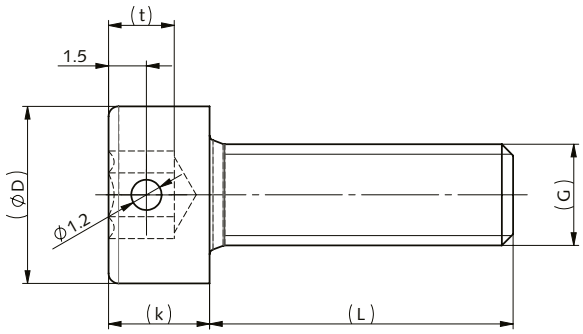

Fig. 9: Mounting screw

Type 8445AS1	M4 for triangular footprint, <350°C
Type 8445AS1HT	M4 for triangular footprint, >350°C
Type 8445AS2	M6 for square footprint, <350°C
Type 8445AS2HT	M6 for square footprint, >350°C

Scope of delivery

- High temperature sensor 8207A…
- individual calibration sheet

Optional accessories	Type/Mat. No.
• High temperature mounting screw	8445AS1HT / 8445AS2HT
• Mounting screw	8445AS1 / 8445AS2
• Mounting adapter to 30x30 mm hole pattern	8433AS30
• Mounting adapter for tubes, Ø25 – ∞	8433AP20
• Mounting bracket for hardline cable,	1423A1
• High temperature thread paste	1059
• Softline cable	1652A…

Ordering key

Typ 8207 A | | | C | | J | |

Ex-Certification

No Ex-Certification	**-**
Ex-ia; Ex-nA	**E**

Footprint

ARINC	**1**
Square Footprint; hole pattern 25x25	**2**

Hardline cable termination

Lemo 2 pol. Connector	**A**
7/16" 2 pol. Connector	**B**
Open Leads	**C**

Cable lenght

3m	**03**
SP (0.5 … 10 m)	**SP**

8207A_003-333e-06.24