KISTLER
measure. analyze. innovate.

Ceramic Shear Accelerometer

Type 8772A...

Light Weight, Voltage Mode, Modal Accelerometers

Light weight, cube shaped accelerometer for vibration measurements in multichannel modal test applications. Cube shaped design allows two units to be placed side by side with sensitive axis oriented to measure acceleration along orthogonal axis.

- Low impedance voltage mode
- Lightweight, ceramic shear modal sensor
- Durable hard anodized, aluminum housing for ground isolation
- Cube shaped for mounting flexibility
- Conforming to CE

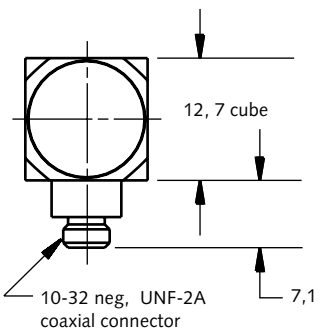

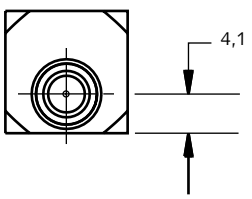

Description

A unique shear element design coupled with an advanced hybrid charger amplifier provides outstanding phase response as well as a wide frequency range. The accelerometer housing is environmentally (epoxy) sealed with a durable, hard anodized finish that electrically isolates the unit from the test structure. The flat sides of the cube housing allow for dual axis unit arrangements and flexible attachment to the test structure. The use of several mounting clips Type 8474 facilitates single unit roving on a test structure.

The built-in charge amplifier provides a low impedance voltage output, allowing the use of standard low cost cabling. These accelerometers will operate directly from the internal power source available in most FFT analyzers or from a large selection of Kistler power supply couplers.

Application

The lightweight ceramic shear design is ideally suited for use in modal test applications where mass loading on very light structures is an important measurement concern.

Aerospace and Automotive vehicle structure testing; air frame flight flutter test, product development test are but of the few application areas suitable for this accelerometer series.

Accessing TEDS Data

Accelerometers with a "T" suffix are variants of the standard version incorporating the "Smart Sensor" design. Viewing an accelerometer's data sheet requires an Interface/Coupler such as Kistler's Type 5134B… or 5000M04 with TEDS Editor software. The Interface provides negative current excitation (reverse polarity) altering the operating mode of the PiezoSmart® sensor allowing the program editor software to read or add information contained in the memory chip.

Mounting

Reliable and accurate measurements require that the mounting surface be clean and flat. The accelerometer can be attached to the test structure by using wax, adhesive or by a mounting clip Type 8474. The operating instruction manual for the Type 8772A… provides detailed information regarding mounting surface preparation, proper application of adhesive, and the dimensional configuration of the mounting clip.

8772A_000-253 e-07.08

This information corresponds to the current state of knowledge. Kistler reserves the right to make technical changes. Liability for consequential damage resulting from the use of Kistler products is excluded.

©2008, Kistler Group, Eulachstrasse 22, 8408 Winterthur, Switzerland
Tel. +41 52 224 11 11, Fax +41 52 224 14 14, info@kistler.com, www.kistler.com

KISTLER
measure. analyze. innovate.

Technical Data

Specification	Unit	Type 8772A5	Type 8772A10	Type 8772A50
Acceleration range	g	±5	±10	±50
Acceleration limit	gpk	±8	±16	±80
Threshold, nom.	grms	0,0004	0,0005	0,002
Sensitivity, ±5 %	mV/g	1 000	500	100
Resonant frequency mounted, nom.	kHz	20	20	20
Frequency response, ±5 %	Hz	1 ... 5 000	1 ... 5 000	1 ... 5 000
Phase shift, <5°	Hz	2 ... 3 000	2 ... 3 000	2 ... 5 000
Amplitude non-linearity	%FSO	±1	±1	±1
Time constant, nom.	s	1	1	1
Transverse sensitivity, nom.	%	<5	<5	<5
Environmental				
Base strain sensitivity @ 250 με	g/με	<0,005	<0,005	<0,05
Shock limit (0,2 ms pulse)	gpk	5 000	7 000	7 000
Temperature coefficient of sensitivity	%/°C	–0,15	–0,1	–0,1
Operating temperature range	°C	0 ... 65	0 ... 65	0 ... 65
Storage temperature range	°C	–23 … 94	–23 … 94	–23 … 94
Output				
Bias, nom.	VDC	11	11	11
Impedance	Ω	<500	<500	<100
Voltage full scale	V	±5	±5	±5
Current	mA	2	2	2
Source				
Voltage	VDC	20 … 30	20 ... 30	20 ... 30
Constant current	mA	2 ... 18	2 ... 18	2 ... 18
Impedance, min.	kΩ	>100	>100	>100
Construction				
Sensing element	Type	ceramic-shear	ceramic-shear	ceramic-shear
Housing/base	material	hard anodized aluminum	hard anodized aluminium	hard anodized aluminium
Degree of protection case/connector (EN 60529)		IP66	IP66	IP66
Connector	Type	10-32 neg.	10-32 neg.	10-32 neg.
Ground isolated		yes	yes	yes
Mass	grams	8	8	8
Mounting	Type	adhesive/wax	adhesive/wax	adhesive/wax

1 g = 9,80665 m/s², 1 Inch = 25,4 mm, 1 gram = 0,03527 oz, 1 lbf-in = 0,113 N·m

8772A_000-253 e-07.08

This information corresponds to the current state of knowledge. Kistler reserves the right to make technical changes. Liability for consequential damage resulting from the use of Kistler products is excluded.

©2008, Kistler Group, Eulachstrasse 22, 8408 Winterthur, Switzerland
Tel. +41 52 224 11 11, Fax +41 52 224 14 14, info@kistler.com, www.kistler.com

KISTLER
measure. analyze. innovate.

Included Accessories	Type
• Mounting wax	8432

Optional Accessories	Type
• Mounting clip, black delrin	8474

Ordering Key

Type 8772A □ □

Range

±5 g	**5**
±10 g	**10**
±50 g	**50**

TEDS Templates

Standard	**–**
Default, IEEE 1451.4 V0.9 template 0 (UTID 1)	**T**
IEEE 1451.4 V0.9 template 24 (UTID 116225)	**T01**
LMS template 117, free format point ID	**T02**
LMS template 118, automotive format (field 14 geometry = 0)	**T03**
LMS template 118, aerospace format (field 14 geometry = 1)	**T04**
P1451.4 V1.0 template 25 – transfer function disabled	**T05**
P1451.4 V1.0 template 25 – transfer function enabled	**T06**

Measuring Chain		Type
1	Low impedance sensor	8772A…
2	Sensor cable, 10-32 pos. to BNC pos.	1761B…
3	Power supply/signal conditioner	51…
4	Output cable, BNC pos. to BNC pos.	1511

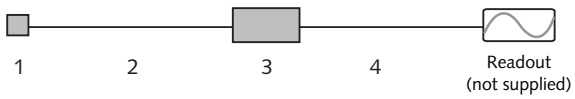

8772A_000-253 e-07.08

This information corresponds to the current state of knowledge. Kistler reserves the right to make technical changes. Liability for consequential damage resulting from the use of Kistler products is excluded.

©2008, Kistler Group, Eulachstrasse 22, 8408 Winterthur, Switzerland
Tel. +41 52 224 11 11, Fax +41 52 224 14 14, info@kistler.com, www.kistler.com